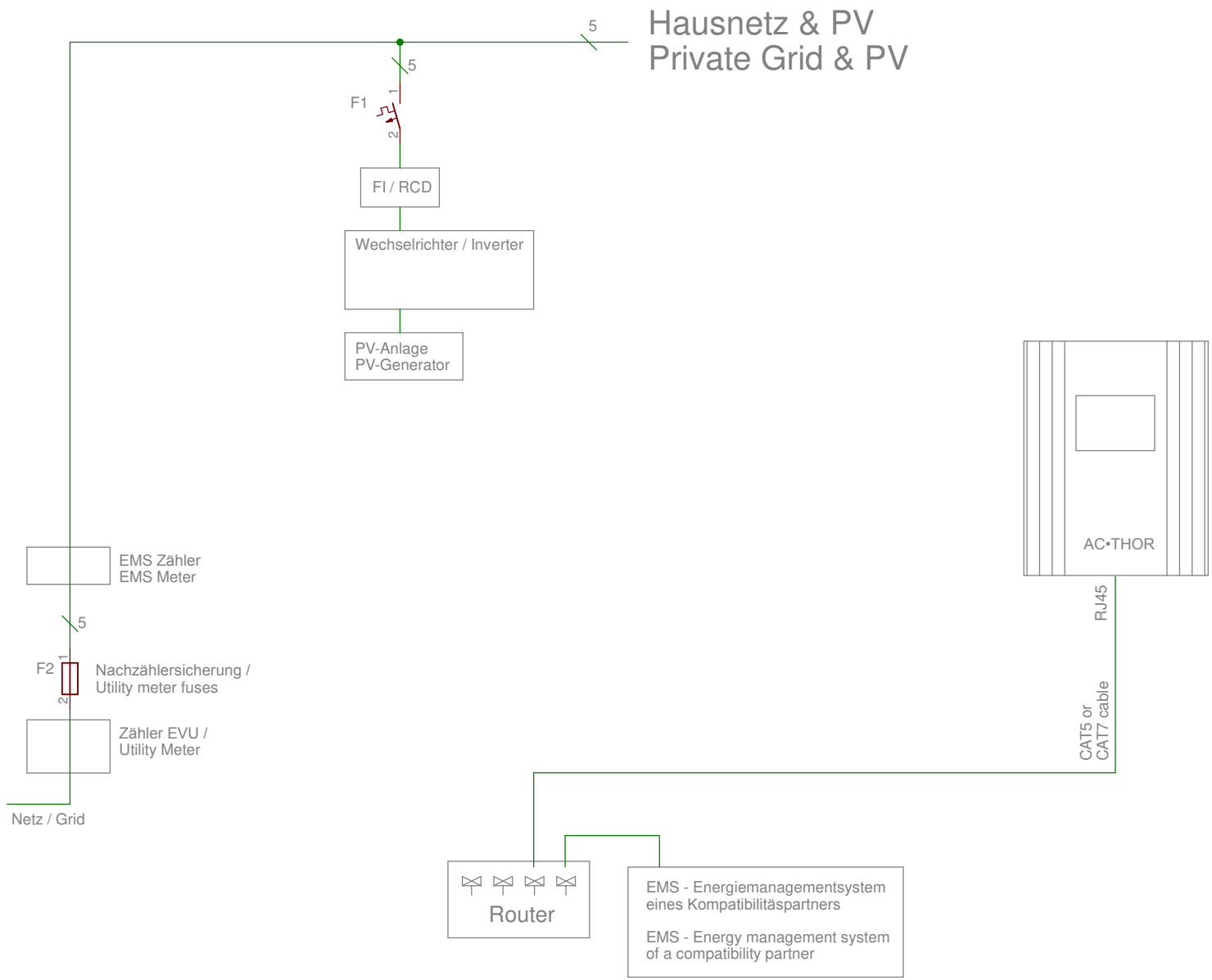AC•THOR Ansteuerung durch Energiemanagementsystem
AC•THOR Control by energy management system