SINCE 1947

DEKS

BY DESIGN

SINCE 1947

DEKS SOLAR SOLUTIONS

BY DESIGN

OUR VISION

Our vision is to provide innovative product solutions by design and delight our customers with operational excellence at every step, ensuring we are their preferred and trusted partner of choice, helping them succeed.

OUR MISSION

DEKS' customer focus helps our customers find the right 'fit and forget' solution by design to solve their problems. We leverage our global manufacturing capability to design, develop and deliver solution oriented construction products, for the wholesaler, contractor and manufacturer to maximise their success.

SOLARDEK™

SOLAR WATERTIGHT MADE A REALITY

Solar Panel | Cable Roof Flashing | Solar Thermal

The focus on renewable energy has never been so large. The solar panel market lacks a purpose made solution for ensuring watertight solar panel pipe and cable penetrations. Our innovation team have created safe, easy and watertight flashing solutions. Available for both Solar PV and Solar Thermal applications.

EPDM is used for Solar PV Cable penetrations. Silicone is used for Solar Thermal applications, ensuring protection against hot pipes whilst blending into the solar panel installation.

scan me

Special Flashing
Made for Solar Thermal & PV Installations

Ensures
Safe, Easy & Watertight Seals

Made for
Tile, Slate & Metal Roofs

NEW PRODUCT!

DRF14MCS
DLR14MCS

DNLS10MB

SDA10MB

DEKTITE® Multicable Solar Flashings

The speciality flashing for solar PV cables on tile, slate or metal roofs.

- Black EPDM High UV Resistance cone
- Available in Aluminium or Nu-Lead® Fast Flash® and Perform® Base
- Weather Seals and Protects up to 10 - 14 Cables
- Multipurpose, safe and weatherproof, all roof type cable entry solution

Pipe External	Roof Pitch	Base Size	Base Type	Code Black EPDM
4 - 8mm	Any	490 x 410mm	Nu-Lead®	DNLS10MB
4 - 8mm	Any	450 x 600mm	Aluminium	SDA10MB
0 - 7mm / 0 - 20mm	Tile / Slate / Metal	498 x 280mm	Fast Flash®	DRF14MCS
0 - 7mm / 0 - 20mm	Tile / Slate	498 x 300mm	Perform®	DLR14MCS

BLACK EPDM — EPDM will withstand constant temperatures at the roofline of -50°C to 115°C and up to 150°C intermittently

DNL100B

SDAMINI

DNLS200MPG

SOLARDEK™ Speciality Flashing for Solar Thermal Installations

The purpose-designed SolarDek™ provides the safest, most efficient method of flashing solar thermal pipes and cables on tile and slate roofs. SolarDek™ features the Nu-Lead® base, which will not stain or corrode the roof, together with a long-life Dektite® EPDM or grey silicone cone ideally suited to solar thermal pipe sizes.

- Grey High Temperature Seal
- Complete Weather Proofing
- Safe Protected Nu-Lead® Apron
- Purpose-made Durable Solution to MCS

Pipe External	Roof Pitch	Base Size	Base Type	Code Black EPDM
0 - 35mm	0 - 45°	490 x 410mm	Nu-Lead®	DNL100B
0 - 30mm	0 - 45°	450 x 600mm	Aluminium	SDAMINIB

BLACK EPDM — EPDM will withstand constant temperatures at the roofline of -50°C to 115°C and up to 150°C intermittently

Pipe External	Roof Pitch	Base Size	Base Type	Code Grey Silicone
0 - 35mm x 2	0 - 45°	490 x 410mm	Nu-Lead®	DNLS200MPG

GREY SILICONE — Silicone will withstand constant temperatures at the roofline of -50°C to 200°C and up to 250°C intermittently

DEKTITE® PREMIUM SOLAR

Perfect for Flashing Pipes and Cables on Metal Roofs

The multi-application flashing in a highly durable EPDM or silicone, edged with a flexible aluminium band, flashes pipes and cables on metal roofs. The square base fits most roof profiles.

Dektite® Premium DFE 100/200

Dektite® Premium DFE 101/201

Dektite® Premium Multicable DFE101BM

- For solar pipes or cables
- Suits most roof profiles
- High UV resistance
- Protects up to 12 cables and weatherproofs entry to any metal roof
- Purpose-made durable solution, as required by MCS

Pipe External	Cable External	Roof Pitch	Base Size	Code Black EPDM	Code Grey EPDM	Code Red Silicone	Fixing Kit Size
0 - 35mm	4 - 8mm	0 - 45°	100 x 100mm	DFE100BS	DFE100GS	DFE200RES	FX901
5 - 55mm	4 - 8mm	0 - 45°	139 x 139mm	DFE101BS	DFE101GS	DFE201RES	FX901
N/A	4 - 8mm	Any	139 x 139mm	DFE101BM	N/A	N/A	FX901

EPDM — EPDM will withstand constant temperatures at the roofline of -50°C to 115°C and up to 150°C intermittently

RED SILICONE — Silicone will withstand constant temperatures at the roofline of -50°C to 200°C and up to 250°C intermittently

DEKTITE® FIXING KITS

Dektite® fixing kits are designed for use with DEKS EPDM and Silicone flashings on metal fibre and cement roofs.

The **FX901 Kit** contains 1 x 75ml tube of low modulus silicone, 25 x self-drilling screws, 25 x colour caps (silver).

The **FX902 Kit** (as shown) contains 3 x 75ml tubes of low modulus silicone, 75 x self-drilling screws, 75 x colour caps (silver).

Self-drilling screws should be placed 25-50mm apart.

Pack	Code
Fixing Kit 1	FX901
Fixing Kit 2	FX902

SOLARDEK™ RUBBER FOOT

Environmentally friendly recycled rubber materials

The SolarDek Rubber Foot complies with the EU ROHS standard. Rubber Feet are supplied with Aluminium 41 x 21 channel section rail with 2 x locking cam bolt, nut, washer and spirit level. The products are a floor mounted rubber support designed to support Air Source Heat Pumps (ASHP), pipe work/cable trays and HVAC units. Additionally, the feet provide moderate amounts of noise and vibration absorption. Suitable for external and internal locations for temperatures between -40°c to 80°c.

Model No.	Description	Specification A (mm)	Specification B (mm)	Specification C (mm)	Specification D (mm)	Weight (kg/pair)	Qty/Pallet	Bearing weight (kg/pcs)	Component
SDRF-250	SolarDek Rubber Foot 250mm (80-220kg)	250	163	98	210	4.87kg	210	80-220	2 Sets of Screws & Level
SDRF-400	SolarDek Rubber Foot 400mm (130-330kg)	400	163	98	360	7.33kg	140	130-330	2 Sets of Screws & Level
SDRF-600	SolarDek Rubber Foot 600mm (250-600kg)	600	163	98	560	10.86kg	80	250-600	2 Sets of Screws & Level
SDRF-1000	SolarDek Rubber Foot 1000mm (300-1000kg)	1000	163	98	960	17.93kg	50	300-1000	2 Sets of Screws & Level

COMMERCIAL CABLE FLASHING

- **Ideal for Solar Solutions!**

Cable Flashing options for Ø32/Ø90/Ø110/Ø160 with Detachable Top for leading cables etc. through flat roofs with bitumen, foil or synthetic membranes.

Our Commercial Cable Flashing solutions are engineered for versatility, durability, and watertight performance - making them the go to choice for contractors, builders, and installers across the UK, Europe, and beyond.

1 **Cable Flashing Ø32 for a slim profile. UV and weather resistant with heat shrink sleeve.**

2 **Cable Flashing Ø90 with detachable top. UV and weather resistant.**

3 **Cable Flashing Ø90 with detachable top, with pipe below the flange.**

4 **Cable Flashing Ø110 with detachable bends for easy cable routing and maintenance. UV and weather resistant.**

5 **Heavy-duty Cable Flashing Ø160 with detachable top. Large, stable base for maximum sealing. High resistance to UV, ozone and weathering.**

SIZING INFORMATION

No.	Material	Code	Type	Membrane
1	EPDM	FR-CCF32-EPDM	Cable flashing Ø32	For a full range of Membranes, please contact us at: sales@deks.co.uk
1	SBS	FR-CCF32-SBS	Cable flashing Ø32	
1	Fast Flash® Base	FR-CCF32-FFB	Cable flashing Ø32	
2	EPDM	FR-CCFS-EPDM	Cable flashing Ø90 with detachable top	
2	SBS	FR-CCFS-SBS	Cable flashing Ø90 with detachable top	
2	Fast Flash® Base	FR-CCFS-FFB	Cable flashing Ø90 with detachable top	
3	EPDM	FR-CCFL-EPDM	Cable flashing Ø90 with detachable top, with pipe below the flange ●	
3	SBS	FR-CCFL-SBS	Cable flashing Ø90 with detachable top, with pipe below the flange ●	
3	Fast Flash® Base	FR-CCFL-FFB	Cable flashing Ø90 with detachable top, with pipe below the flange ●	
4	EPDM	FR-CC110-EPDM	Cable flashing Ø110 with detachable top	
4	SBS	FR-CC110-SBS	Cable flashing Ø110 with detachable top	
4	Fast Flash® Base	FR-CC110-FFB	Cable flashing Ø110 with detachable top	
5	EPDM	FR-CC160-EPDM	Cable flashing Ø160 with detachable top	
5	SBS	FR-CC160-SBS	Cable flashing Ø160 with detachable top	
5	Fast Flash® Base	FR-CC160-FFB	Cable flashing Ø160 with detachable top	

NB: ALL HAVE A MATT SURFACE ● TYPE HAS THE PIPE BELOW THE FLANGE

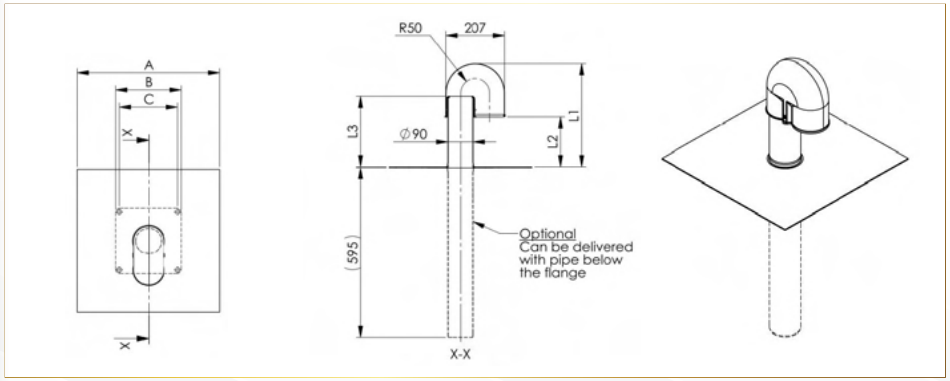

Type (Surface)	Membrane	A	B	C	L1	L2	L3
MATT	Bitumen	500 x 500	230 x 230	204 x 204	362	175	245
	Foil	400 x 400*	230 x 230	200 x 200			

*ON MODELS WITH FOIL MEMBRANE, SIZE A VARIES DEPENDING ON THE FOIL TYPE. FOIL MEMBRANES HAVE ROUNDED CORNERS.

SolarDek™ HookFlash

The complete flashing solution for on-roof installations

The SolarDek™ HookFlash provides a sealing solution for on-roof solar when roof hooks need to be flashed on slate, concrete or flat profile tiles. This together with the Dektite® Multicable solar flashing provides the installer with a water tight peace of mind solution for on-roof solar installations.

Kits includes 1 x SolarDek™ HookFlash and foam insert to flash over on-roof solar roof hooks.
Visit - www.deks.co.uk/hookflash

Code	Base Size
SDHF - S	245 x 230mm
SDHF - L	360 x 360mm

SolarDek™ PanelDrain

Discover the ultimate solution for maintaining the efficiency and longevity of your solar panels with SolarDek's new PanelDrain. This innovative water drain clip is specifically designed to enhance solar panel performance by eliminating water and dust accumulation, making it perfect for low-tilt installations from 3° up to 15°.
Visit - www.deks.co.uk/paneldrain

Panel Drain Clips

Various size options available

Code	Base Size
SDPD - 30	30mm
SDPD - 32	32mm
SDPD - 35	35mm

SolarDek™ TileFlash®

Tile flashing solution for on-roof installations

Innovative tile and cable flashing solution for flat tiles. Enables up to 4 cables to pass through the rubber tile as well as creating a cushion for the solar hook. Lower profile design also creates less tile lift when installed with the solar hook. Your dual-purpose flat tile mounting solution.

Code	Base Size
SDTF - RO	250mm x 165mm

SolarDek™ Bird Proofing

Avoid nesting birds and filthy mess on your solar panels...

Bird Brush - Flexible Solution

Introducing one of the fastest fitting bird protection products on the market. Specifically designed for on-roof solar, enabling the installer to create a bird proof solution in double quick time. The brush design offers an unobtrusive flexible solution without the need for any special tools or clips to be fitted.

Code	Base Size
SDBB - 1m	Length - 1m Diameter - 160mm

Bird Mesh - Durable Solution

DEKS Bird Mesh is a high-quality avian control solution designed for both durability and long-term performance. Manufactured from 16-gauge, 1.5mm diameter hot-dipped galvanised wire, this mesh provides exceptional strength and resistance to corrosion, ensuring reliable protection against birds.

Code	Description
SDBM-KIT	30m Roll and 150 x 30mm Clips
SDBM-KIT-35mm	30m Roll and 150 x 35mm Clips

DEKS FAST FLASH® - BBA ACCREDITED

Self-adhesive and user-friendly Lead replacement material

Fast Flash® is ideal for any application requiring a quick and secure flashing solution.

Fast Flash® can be installed on roofs with a minimum slope of 5° and on almost all roof materials. Fast Flash® is environmentally friendly and easy to install, as the reverse is self-adhesive, as well as being flexible and very workable.

If painting is required or where water is likely to travel from copper or bitumen onto Fast Flash®, use 100% acrylic low sheen exterior paint.

- **Easy to Install**
  Light weight, easy to trim and fully self-adhesive
- **Flexible and Very Workable**
  Malleable and stretchable. Dresses well to all profiles
- **Product Range**
  Rolls in four standard sizes, and colours black, grey and anthracite grey. (Grey colour matches old/worn Lead. Anthracite grey matches new Lead)
- **Environmentally Friendly**
  Aluminium stretch mesh cast in polymer rubber
- **Slower-Set Adhesive**
  Allows time for repositioning - 20/30 mins
- **Solutions**
  Ideal solution for flashing in roof solar panels, around roof lights, abutments and chimney stacks etc.

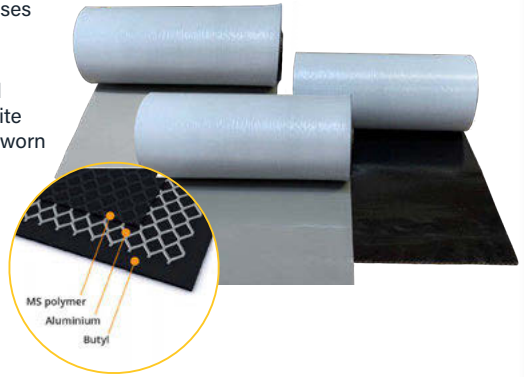

Product Code	Description	Weight
FFR5-140G	140mm x 5m Roll - Grey	2.4kg
FFR5-280G	280mm x 5m Roll - Grey	4.7kg
FFR5-370G	370mm x 5m Roll - Grey	5.9kg
FFR5-560G	560mm x 5m Roll - Grey	9.2kg
FFR5-140B	140mm x 5m Roll - Black	2.4kg
FFR5-280B	280mm x 5m Roll - Black	4.7kg
FFR5-370B	370mm x 5m Roll - Black	5.9kg
FFR5-560B	560mm x 5m Roll - Black	9.2kg
FFR5-140AG	140mm x 5m Roll - Anthracite Grey	2.4kg
FFR5-280AG	280mm x 5m Roll - Anthracite Grey	4.7kg
FFR5-370AG	370mm x 5m Roll - Anthracite Grey	5.9kg
FFR5-560AG	560mm x 5m Roll - Anthracite Grey	9.2kg

PERFORM® HAMMER
Shaping the covering material

For best results when shaping the covering material to suit profiled roofing, use a Perform® Hammer.

Code	Description	Weight
HAMMER	Perform® Hammer	0.5kg

sales@deks.co.uk
www.deks.co.uk
01275 858 866

View our Solar product range on our website here.

To find your DEKS contact on a Map please connect to our website with this QR code.

SCOTLAND
Neil Cauldwell
BUSINESS DEVELOPMENT MANAGER
neilc@deks.co.uk
07494 230 768

NORTH ENGLAND & IRELAND
Martin Hipkin
BUSINESS & PRODUCT DEVELOPMENT DIRECTOR
martinh@deks.co.uk
07780 446 597

SOUTH WEST & WALES
Damion Smith
BUSINESS DEVELOPMENT MANAGER
damions@deks.co.uk
07903 389 220

SOUTH EAST & HOME COUNTIES
Andy Minas
SALES DIRECTOR
andym@deks.co.uk
07534 294 255

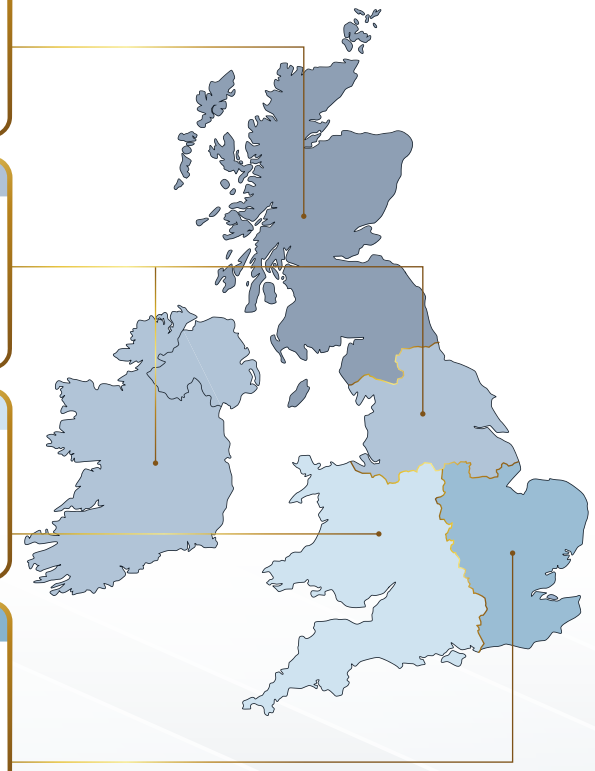

SINCE 1947

DEKS BY DESIGN

DEKS DRAINAGE BY DESIGN

DEKS LEAD FREE FLASHINGS BY DESIGN

DEKS FLASHINGS BY DESIGN

DEKS SOLAR SOLUTIONS BY DESIGN

DEKS OEM BY DESIGN

DEKS LANDSCAPING BY DESIGN

DEKS FLAT ROOFING BY DESIGN

sales@deks.co.uk

www.deks.co.uk

01275 858 866

DEKS Industries Europe Ltd
West End Trading Estate
Blackfriars Road
Nailsea, Bristol, BS48 4DJ

While every effort has been made to ensure that the details in this brochure are correct at the time of print, we cannot accept responsibility for any errors or omissions.

V5 DEC 25